PART 2 # 16

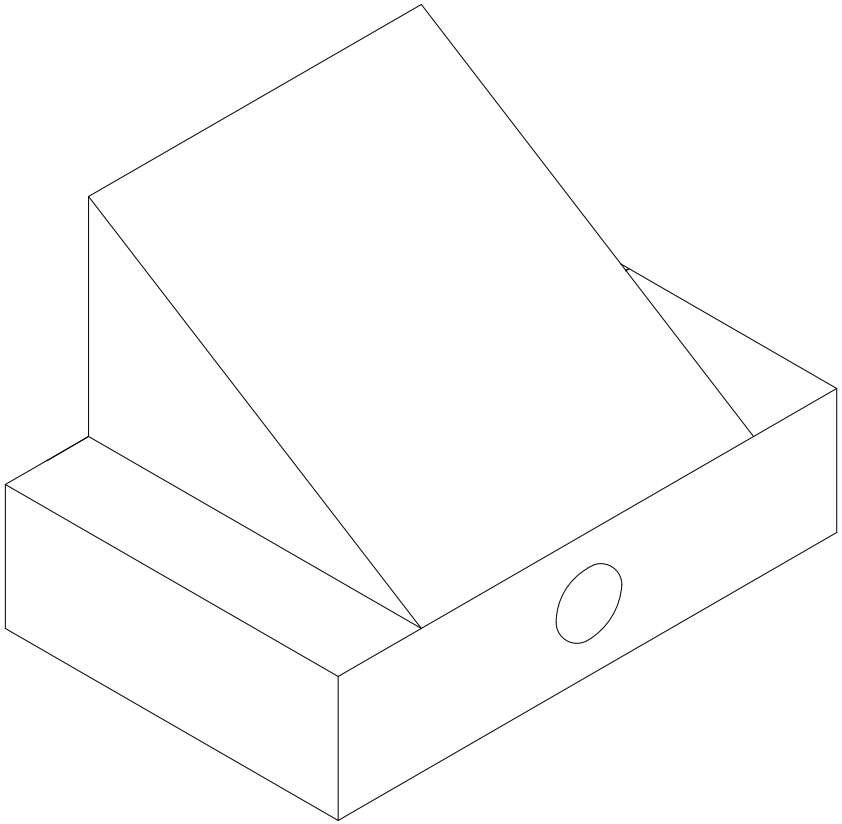

STEVENSON HIGH SCHOOL

TECHNOLOGY EDUCATION DEPARTMENT

TECHNICAL DRAWING PROGRAM

DRN BY: QUINTON WILDE

DATE: 11/3/11

SCALE: FULL

ISOMETRIC EXCERCISE 3

1

1